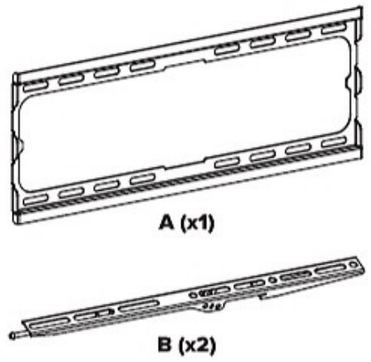
A (x1)
B (x2)

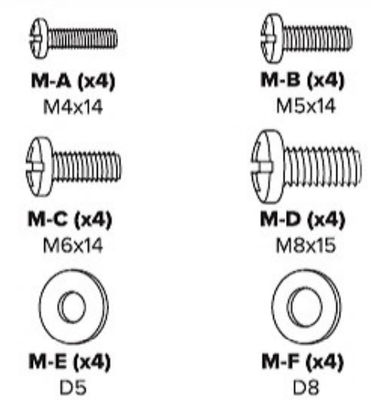
M-A (x4)
M4x14
M-B (x4)
M5x14
M-C (x4)
M6x14
M-D (x4)
M8x15
M-E (x4)
D5
M-F (x4)
D8

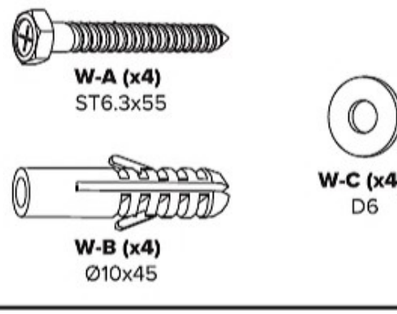
W-A (x4)
ST6.3x55
W-B (x4)
Ø10x45
W-C (x4)
D6

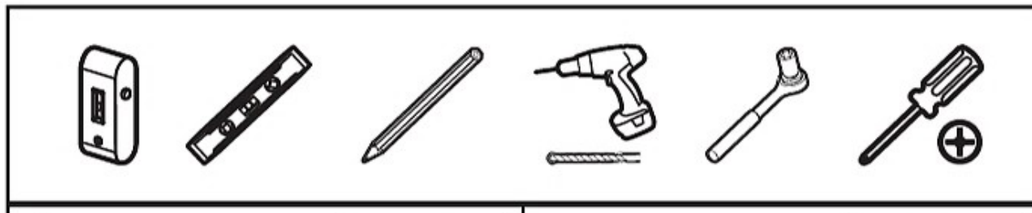

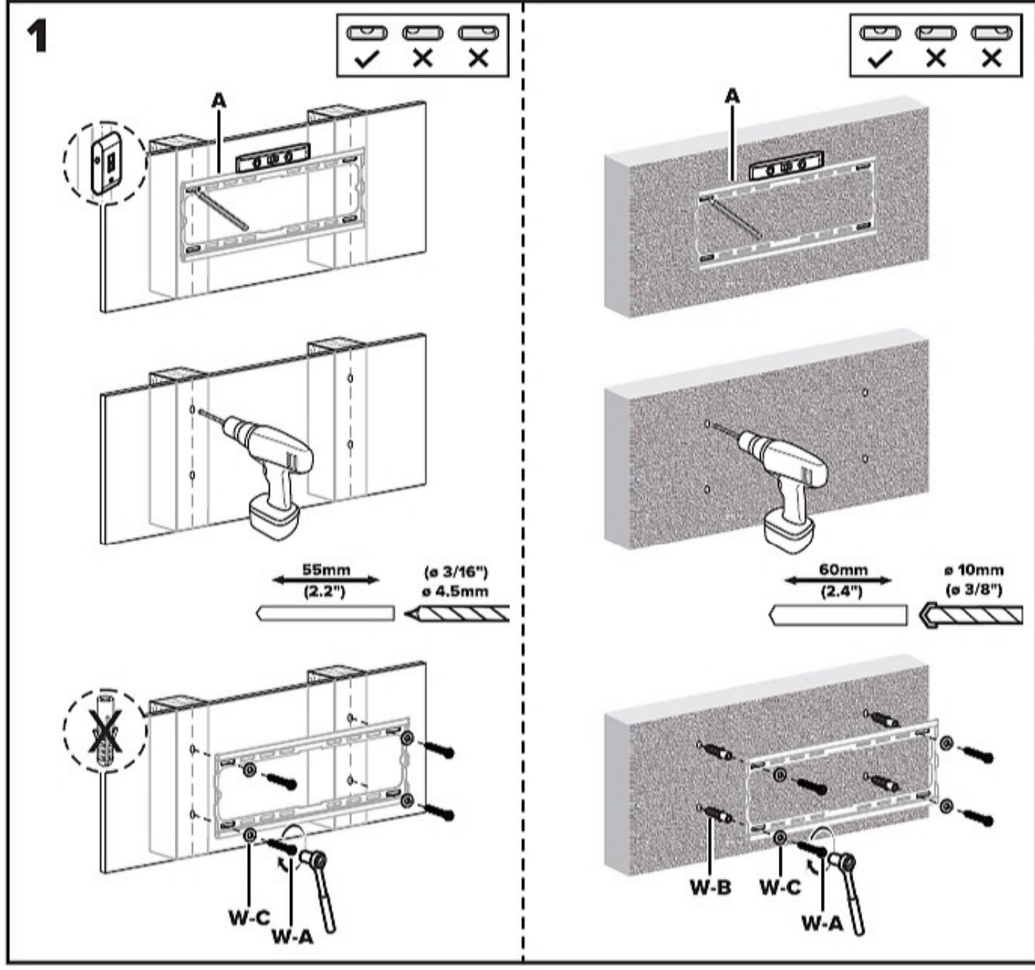
1
A
55mm
(2.2")
(ø 3/16")
ø 4.5mm
W-C
W-A
A
60mm
(2.4")
ø 10mm
(ø 3/8")
W-B
W-C
W-A

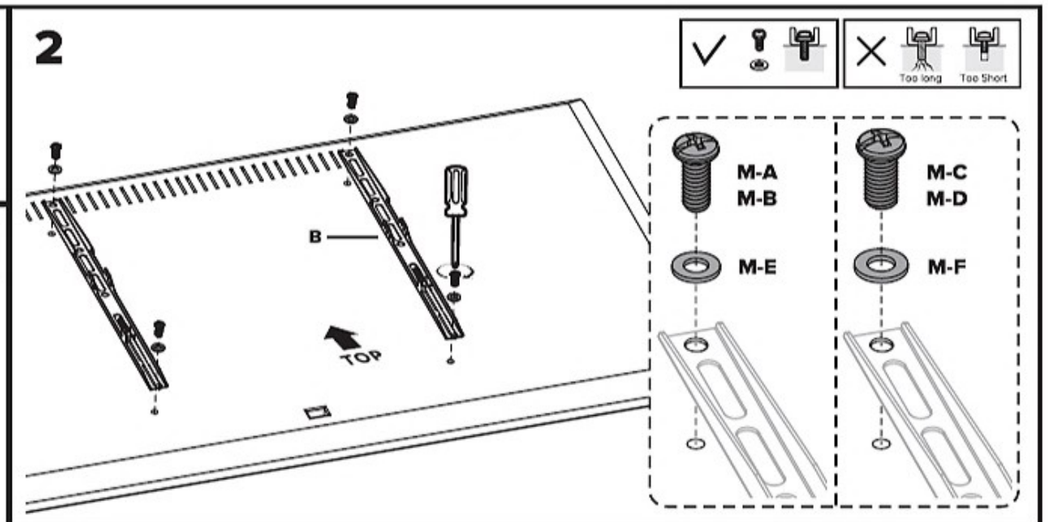
2
Too long
Too Short
B
TOP
M-A
M-B
M-E
M-C
M-D
M-F

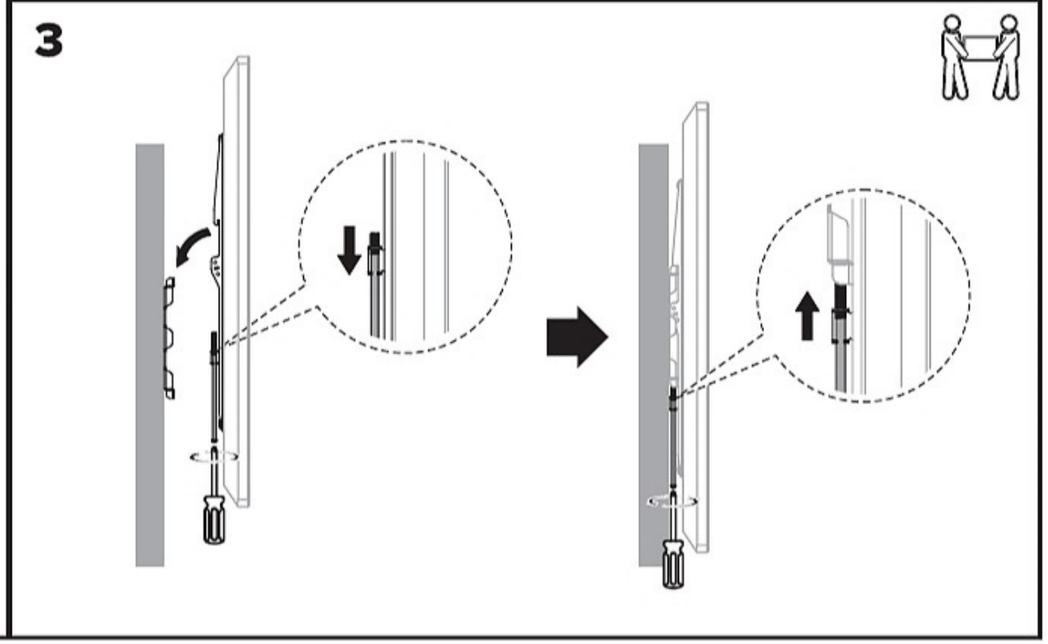
3