ewent

EW1160

Quick Install | Snel installeren | Installation rapide | Schnelle Installation | Installazione rapida | Instalación rápida | Gyors telepítés | Guia de instalação rápida | Бързо инсталиране | Snabb installation

POWER BANK ULTRASLIM 5000mAh MAGSAFE® PD 20W

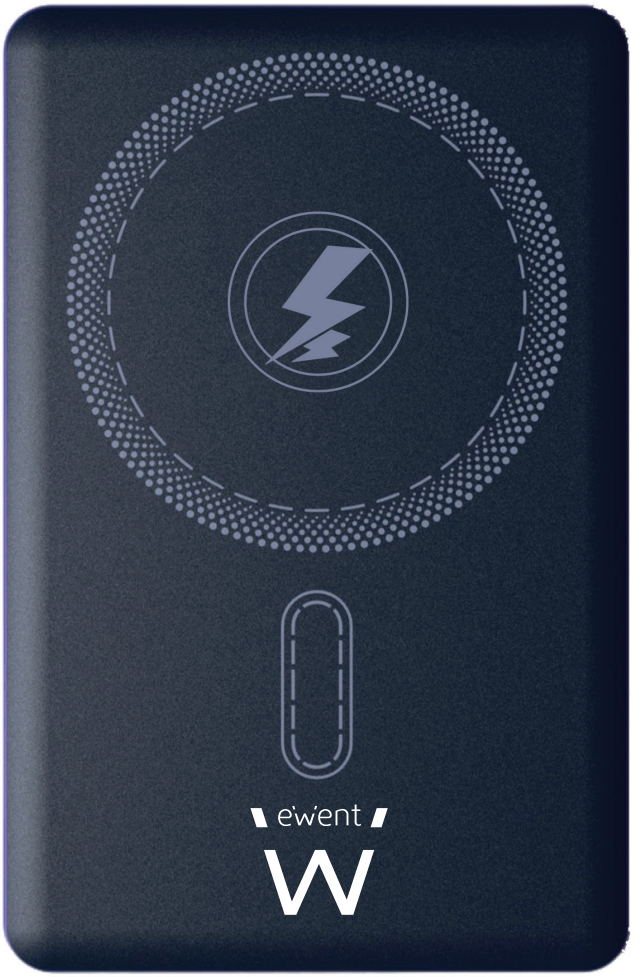

22
PAP

5 YEARS WARRANTY
WWW.EWENT-ONLINE.COM

- **EN** • Download the manual in your language through the QR code.
- **NL** • Download de handleiding in uw taal via de QR-code.
- **FR** • Téléchargez le manuel dans votre langue grâce au QR Code.
- **IT** • Scarica il manuale nella tua lingua dal codice QR.
- **DE** • Laden Sie die Anleitung in Ihrer Sprache über den QR-Code herunter.
- **ES** • Descargue el manual en su idioma desde el código QR.
- **PT** • Descarregue o manual na sua língua a partir do código QR.
- **HU** • Töltse le a saját nyelvén a használati útmutatót a QR-kódon keresztül.
- **BG** • Изтеглете ръководството на Вашия език чрез QR кода.
- **SE** • Ladda ner manualen på ditt språk från QR-koden.

EW1160

INSTRUCTIONS

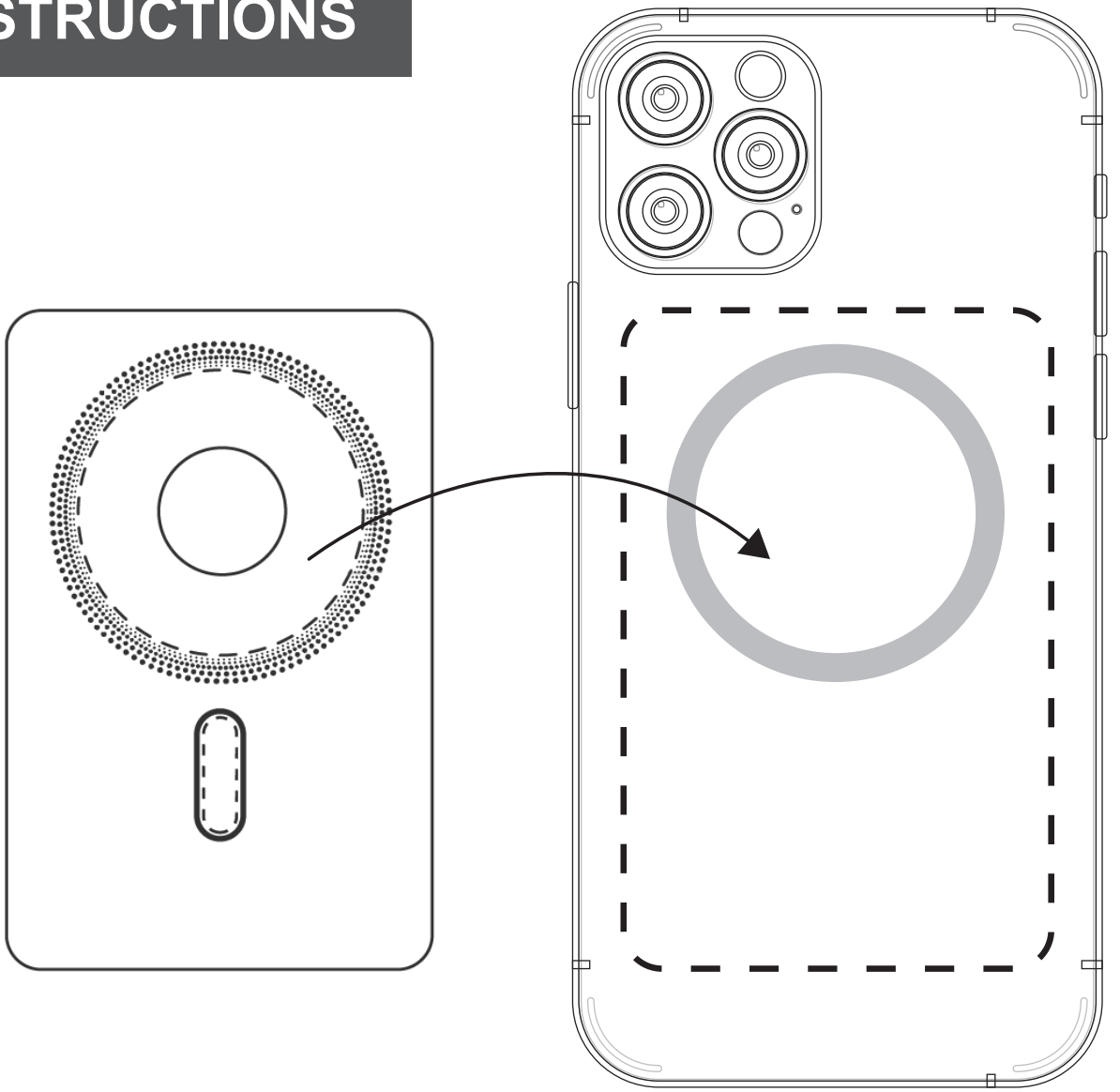

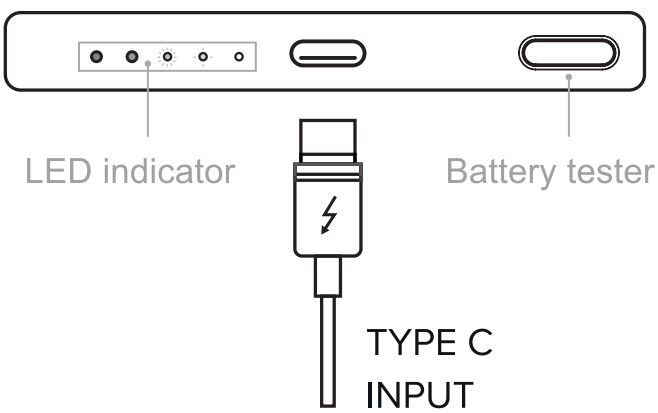

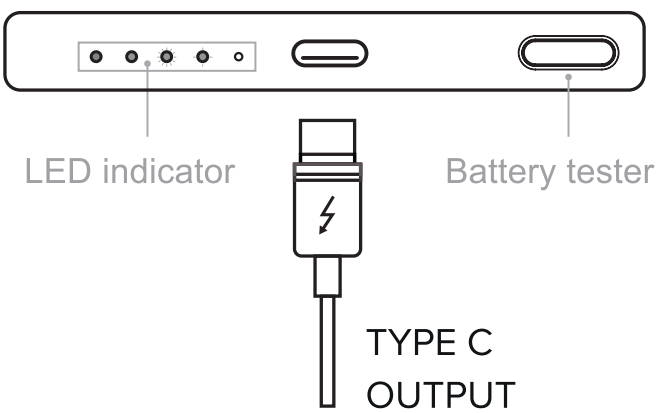

CHARGING PROCESS				
Charging %	LED1	LED2	LED3	LED4
0-25%	Blink	OFF	OFF	OFF
25-50%	ON	Blink	OFF	OFF
50-75%	ON	ON	Blink	OFF
75-96%	ON	ON	ON	Blink
Completo	ON	ON	ON	ON
When wireless charging, LED5 green light will on.				

PRODUCT SPECIFICATION	
MODEL:	EW1160
CAPACITY:	5000MAH
BATTERY:	Lithium polymer battery
BATTERY POWER:	37WH/3.7V
TYPE C INPUT:	5V-3A 9V-2.2A (18W max)
TYPE C OUTPUT:	5V-3A 9V-2.2A 12V-1.67ALED
REMAIN BATTERY:	Indicator lights

TIPS

- Please read the user manual and words on product surface carefully before using.
- Charge the power bank with USB-A output of a computer or a DC 5V adapter, no more than 24 hours.(Plug out the charging cable when the power bank is fully charged, with all power LED on).
- Please keep away from heat sources, high voltage and keep it out of reach of children when using the power bank.
- Please do not disassemble the product by yourself and keep away from damp place for safety.
- If the product has not been used for a long period, it is better to store the power bank with half power in a cool and dry place.
- Do not throw the discarded power bank into fire or water; dispose it properly and safely
- Do not use the product in a static electricity place, as above 1000V static electricity can easily damage the protective circuit equipped in the product, which is applied to avoid various unexpected situations. And the damage of the circuit may cause the abnomal operation, heating, deformation, fume or burning.
- During your first use of the product, if anything abnormal, like smelling or not well assembled, stop using it to charge your phone or other deivces and return it to the distributor.
- Please keep the product out of reach of children.
- If the power bank is not used for a long time, it is best to store it with half power , fully charged storage will reduce the service life, power-off storage may cause over-discharge, of which both are bad to the power bank.

- Do not put the product into water, fire, and environment at high temperature(>45℃) or low temperature(< -10℃).
- Keep it and its accessories out of reach of children
- Do not disassemble or refit the product, to avoid damaging the protection device of this product, causing the battery to heat up,catch fire or explode.
- Do not throw the product violently, bump, rub etc., which will cause product defects, perforations, cracks, deformities, corrosion and other abnormal phenomena. If any of these, please stop using it immediately.
- Please use a dry and soft cloth to clean the product surface, no chemicals, soap or detergents.

EN We, Ewent of Crocevia 12, 39057 Appiano, Italy declare under our sole responsibility that our product EW1160 POWER BANK ULTRASLIM 5000mah Magsafe® PD 20W to which this declaration relates is in conformity with the essential requirements and other relevant provisions of the guidelines (RoHS)2011/65/EU, 2015/863/EU; (EMC)2014/30/EU. The original EU declaration of conformity can be found at http://www.ewent-online.com.

NL Wij, Ewent, Crocevia 12, 39057 Appiano, Italy, verklaren onder onze enige verantwoordelijkheid dat ons product EW1160 POWER BANK ULTRASLIM 5000mah Magsafe® PD 20W , waarop deze verklaring betrekking heeft, in overeenstemming is met het essentiële eisen en andere relevante bepalingen van de richtlijnen (RoHS)2011/65/EU, 2015/863/EU; (EMC)2014/30/EU. De originele EU-conformiteitsverklaring kan te vinden op: http://www.ewent-online.com.

FR Nous, Ewent de Crocevia 12, 39057 Appiano, Italy Déclarons sous notre entière responsabilité que notre produit EW1160 POWER BANK ULTRASLIM 5000mah Magsafe® PD 20W auquel cette déclaration se rapporte est conforme aux spécifications essentielles et dispositions pertinentes de ce manuel (RoHS)2011/65/EU, 2015/863/EU; (EMC)2014/30/EU. La déclaration de conformité UE originale se trouve sur http://www.ewent-online.com.

IT Noi di Ewent di Crocevia 12, 39057 Appiano, Italy Dichiariamo sotto la nostra esclusiva responsabilità che il nostro prodotto EW1160 POWER BANK ULTRASLIM 5000mah Magsafe® PD 20W a cui si riferisce la presente dichiarazione è conforme ai requisiti essenziali e ad altre disposizioni pertinenti delle linee guida di (RoHS)2011/65/EU, 2015/863/EU; (EMC)2014/30/EU. La dichiarazione di conformità UE originale è disponibile presso http://www.ewent-online.com.

DE Wir, Ewent mit Crocevia 12, 39057 Appiano, Italy, Erklären in alleiniger Verantwortung, dass unser Produkt EW1160 POWER BANK ULTRASLIM 5000mah Magsafe® PD 20W auf das sich diese Erklärung bezieht, mit den wesentlichen Anforderungen und anderen relevanten Bestimmungen der Richtlinien (RoHS)2011/65/EU, 2015/863/EU; (EMC)2014/30/EU. Die originale EU-konformitätserklärung finden Sie unter http://www.ewent-online.com.

ES Nosotros, Ewent de Crocevia 12, 39057 Appiano, Italy Declaramos bajo nuestra exclusiva responsabilidad que nuestro producto EW1160 POWER BANK ULTRASLIM 5000mah Magsafe® PD 20W al que se refiere esta declaración cumple los requisitos esenciales y otras disposiciones pertinentes de las directrices (RoHS)2011/65/EU, 2015/863/EU; (EMC)2014/30/EU. La declaración de conformidad original de la UE se puede encontrar en http://www.ewent-online.com.

PT A Ewent sediada em Crocevia 12, 39057 Appiano, Italy Declara sob a sua exclusiva responsabilidade que o produto EW1160 EWENT Power Bank, carregador ULTRASLIM Magsafe 5000mAh PD 20W, entrada e saída UltraSlim e USB C de alta velocidade, bateria de telefone portátil PowerBank para iPhone 15 Samsung Xiaomi iPad, cor preta ao qual esta declaração se refere, está em conformidade com os requisitos essenciais e outras disposições relevantes das diretivas (RoHS)2011/65/EU, 2015/863/EU; (EMC)2014/30/EU. A declaração de conformidade da UE original pode ser consultada em http://www.ewent-online.com.

HU Ewent, Crocevia 12, 39057 Appiano, Italy. Kizárólagos felelősségünkre kijelentjük, hogy termékünk EW1160 POWER BANK ULTRASLIM 5000mah Magsafe® PD 20W, a nyilatkozat tárgya megfelel az iránymutatások alapvető követelményeinek és egyéb vonatkozó rendelkezéseinek. (RoHS)2011/65/EU, 2015/863/EU; (EMC)2014/30/EU. Az eredeti EU-megfelelőségi nyilatkozat megtalálható a következő helyen: http://www.ewent-online.com.

BG Ние, Ewent с адрес Crocevia 12, 39057 Appiano, Italy Декларираме на своя собствена отговорност, че нашият продукт EW1160 POWER BANK ULTRASLIM 5000mah Magsafe® PD 20W , до когото се отнася тази декларация, е в съответствие с основните изисквания и други приложими разпоредби на насоките (RoHS)2011/65/EU, 2015/863/EU; (EMC)2014/30/EU. Оригиналната декларация за съответствие на ЕС може да бъде намерена на http://www.ewent-online.com.

SE Vi,Ewent på Crocevia 12, 39057 Appiano, Italy Tillkännager under vårt ensamma ansvar att vår produkt EW1160 POWER BANK ULTRASLIM 5000mah Magsafe® PD 20W som denna deklaration avser, överensstämmer med de väsentliga kraven och andra relevanta bestämmelser i riktlinjerna (RoHS)2011/65/EU, 2015/863/EU; (EMC)2014/30/EU. Den ursprungliga EU-försäkran om överensstämmelse finns på http://www.ewent-online.com.

•**EN** You can find safety information at •**DE** Sicherheitshinweise finden Sie unter •**FR** Vous pouvez trouver des informations portant sur la sécurité sur •**ES** Puede encontrar información de seguridad en •**IT** È possibile trovare informazioni sulla sicurezza sul sito •**PT** Pode encontrar informações relativas a segurança em •**DU** Veiligheidsinformatie vindt u op •**CZ** Bezpečnostní informace můžete nalézt na adrese •**DK** Du kan finde sikkerhedsoplysningerne på •**NO** Du finner sikkerhetsinformasjon på •**SE** Du hittar säkerhetsinformation på •**FI** Turvallisuustiedot löytyvät osoitteesta •**SL** Varnostne informacije so na voljo na naslovu •**GR** Μπορείτε να βρείτε πληροφορίες ασφάλειας στη διεύθυνση •**TR** Güvenlik bilgilerini adresinde bulabilirsiniz •**BG** Информация за безопасност ще откриете на: **https://www.ewent-eminent.com/en/safety**